Appendices

Debate n°1 — Terminology

Announcing "twin-boom aircraft projects" designed in 1939-1945, there was a risk of misunderstanding if some ambiguity occurs within the words "project", "aircraft", "twin-boom".

• "Projects"

The mass-produced models are not known as simple "projects" while each one of them was born as a project before being ordered – was it necessary to take them into account?

In the same way, a rejected prototype could be considered as an actual machine having not remained a pure project, while it embodied a cancelled industrial project.

Finally, a median way was selected : the text covers all projects (in the largest meaning), no matter their success or failure, while the illustration goal was a maximum originality, omitting famous models.

• "Aircraft"

There is no problem with this word in the English translation, while the French original equivalent ("aéronef") was too rare to be used, leading to a word excluding partly gliders and autogiros.

• "Twin-boom"

Eight (French) definitions were found, in various dictionaries, glossaries and lexicons:
- "twin-boom: plane whose tail is connected to the rest of the cell by 2 booms"
- "twin-boom: plane whose rear consists of 2 elements which support the tail"
- "twin-boom: that includes 2 parallel booms"
- "twin-boom: that includes 2 parallel booms fixed on a same big part; example: special cranes"
- "twin-boom: plane in which the fuselage tail section is replaced by 2 streamlined booms"
- "twin-boom: machine whose fuselage tail section is 2 main booms holding the tail"
- "twin-boom: system of double-fuselage; example: Caudron G III"
- "twin-boom: aircraft with 2 booms, framing laterally one closed piece of sky"

All these definitions agree to depict the P-38 as twin-boom and the Boeing 747 as not-twin-boom – this is enough to classify 99% of aircraft. But concerning borderlines, nothing is clear: reading definitions referring to "the tail", is it mandatory to reject models with two booms and two tails (Ar 340)? or can that be read as one double-tail? In the same way: do the definitions speaking of "the fuselage" reject twin-fuselage models (P-82)? or do they refer to a "possible fuselage"? And are the characters of parallelism, tail rear position (mentioned by only some of the definitions) obligatory?

To avoid contradiction, it could be possible to say "each definition is an example, nonexclusive." – but then, nothing would prohibit anymore to affirm than the Boeing 747 is twin-boom... In this blurred context, it seemed appropriate to define an arbitrary, personal, clear definition*: "twin-boom = aircraft whose tail is supported by 2 booms (and only 2)*".

It was then possible to examine the borderline items, and in this process, the PB.41 "passed" with a tiny margin (beams between wings were not counted as booms), while were rejected the following cases:

- Several-boom: Antonov KT, Doblhoff WNF 342 V3 and V4, Fieseler Fi 168, reinforced Skoda-Kauba SL-6, Michelet Rubis
- Triplex-boom: Auxiliary Wing with Miles Magister (or other tailed models - including the XP-56), canard version of P-38, Nikitin PSN-2, Blohm und Voss P.192, Focke-Wulf P.0310.251.006, SNCAC NC-1070/1075
- Twin-stubs: Blohm und Voss P.208 to P.215, "Gotha Go 237A"
- Twin-pod flying wings: Byelyayev DB-LK and Dvukhvostka, Payen Pa.360/370 and Pa.445, Heinkel P.1078B

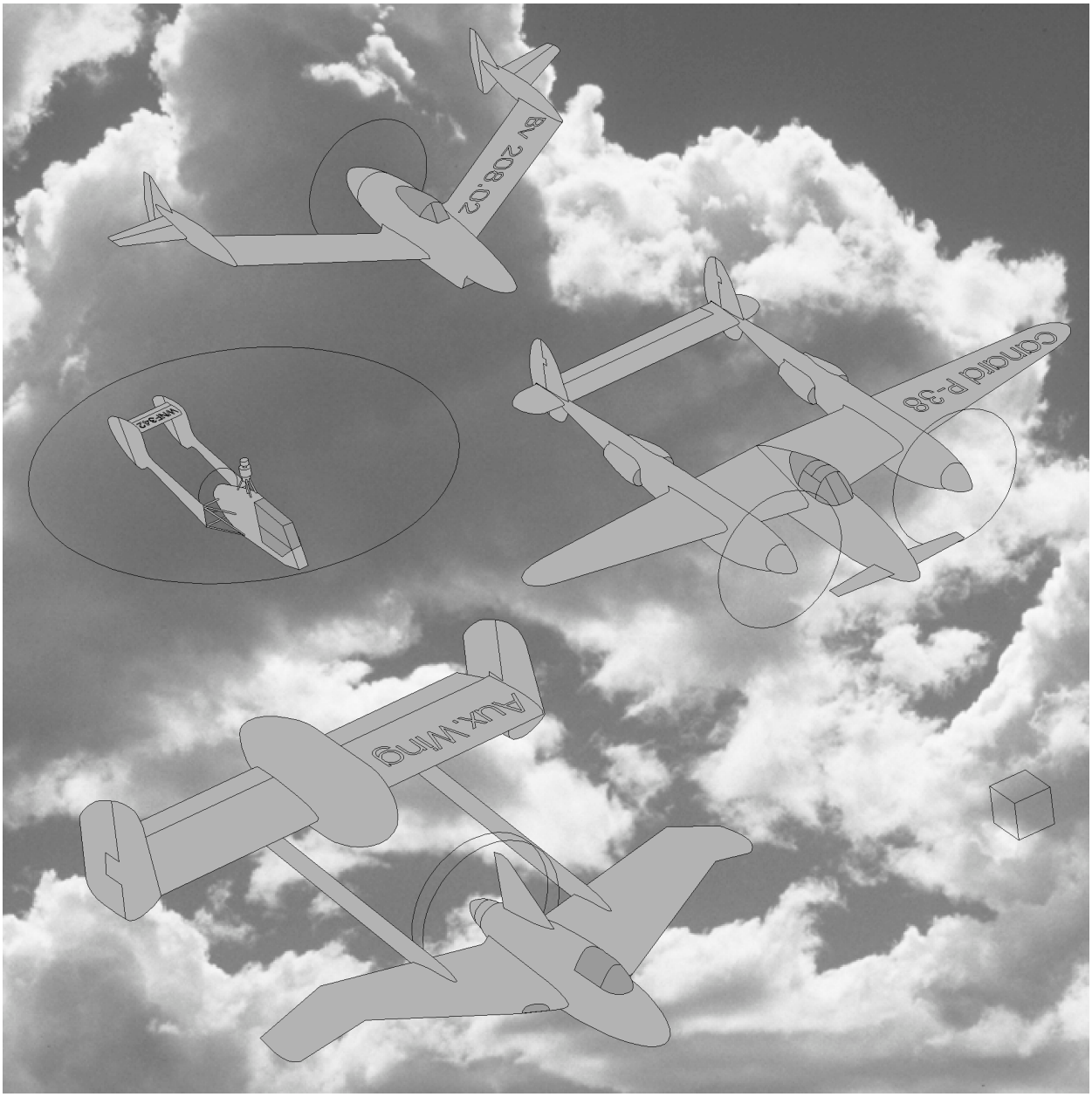

* "Twin-fuselages"

A whole chapter (n°2) was devoted to "twin-boom/fuselage", and this is a problem: many authors consider that all twin-boomers are twin-fuselages, the booms being like fuselages, while other authors on the contrary pretend that no twin-fuselage can be described as twin-boom, since a proper fuselage cannot be regarded as a boom (our chapter 2 should be rejected)... Once again, it was necessary to decide: twin-boomers and twin-fuselages are regarded here as distinct groups, with an intersection (twin-boom twin-fuselages, e.g.P-82) and specific elements : twin-boom non-twin-fuselage, e.g.SAAB 21, and twin-fuselage non-twin-boom – mostly the twin-pods which have several booms, or no boom like the DB-LK and Pa.360 below. The examination of *all* twin-boomers thus includes *some* twin-fuselage planes but not *all* the twin-fuselage planes.

Some authors consider also that a fuselage must be inhabited to deserve this name: the asymmetrical SM.92 or the single-seat XP-82 would not be twin-fuselages (and a radio-controlled F-86 would have no fuselage anymore...). The worst concerns the asymmetrical Bv 141 (or its P.111 cousin below), with a starboard pod and a port boom: some experts classify it as twin-fuselage, others as a plane without fuselage; and among those who regard it as a single-fuselage, some say the fuselage is the starboard part, the others disagree affirming the fuselage is the port element... Clear, isn't it? **J**

Debate n°2 — Dates

In the introduction, it was explained how this work was centered on famous years rather than a precise war time. Many historians consider that World War II occurred in 1941-45 with the USA and USSR involvement – after local battles between Western European countries (1939-40) and Asiatic countries (1937-40); however, other historians point out that the war extended to all continents in 1939, through the British and French empires. Among time windows qualified as WWII years, here is simply selected the largest.

Similarly, writing "1939-45", or referring to years starting on January 1st, is not at all scorning the Japanese/Chinese/Moslem/Jew calendars but simply using the common convention of most aviation books.

Often, books and articles devoted to the planes of 1939-45 focus on the models used at that time. To reject out-of-date antique ones, some focus on planes manufactured at that time. However, among twin-boomers mass-produced between 1939 and 1945, several had been designed between 1935 and 1938. Including this period would have been another subject, here is only the project overview (design department proposals between 1939 and 1945) without any militarist logic ("planes which could have fought between 1939 and 1945"). Only the most interesting models of this preliminary period are illustrated in this appendix, from a big list:

- *booms on pod*: CCF CB-34, Cunliffe-Owen OA-1, Burnelli A-1, Fokker 160, Antonov LEM-2
- *twin-fuselages*: Letov S56, Bestetti-Nardi BN-1, Glenn Martin 142 and 193, DTD Biplane Fighter, James Martin Twin Hull Ocean Plane, Schmued-Beeman Twin fuselage fighter, Lockheed X-608

(continuation following page)

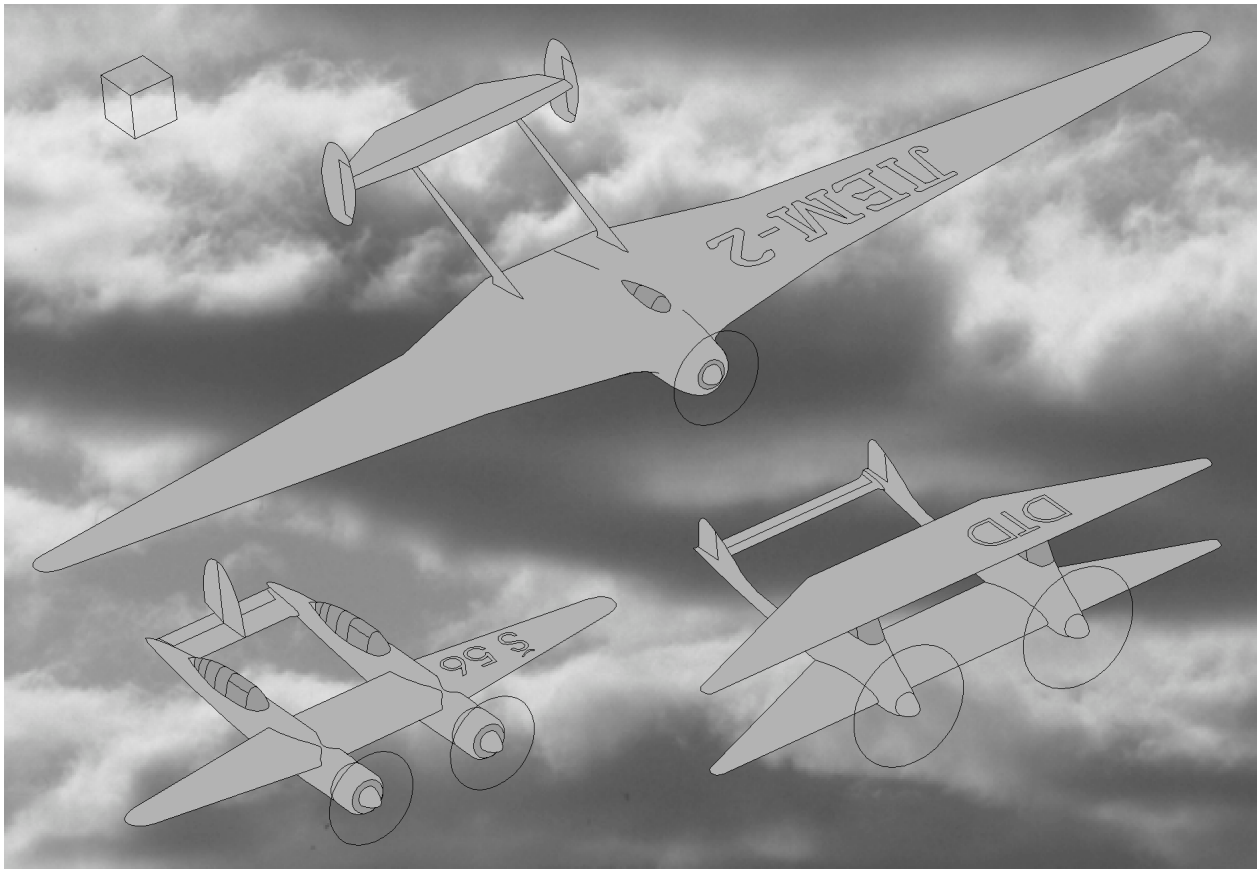

- *booms beside pod* :

• with rear propeller: Stearman-Hammond Y, ITS 8, KB-2 PI/LSB, Weick W-1, Campbell monoplane, SAIMAN LB.2, Blohm und Voss P.28, Bréguet Br 803, Albert bi-empennages, Aubert PA-60, Abrams P.2/PC.4 Explorer, De Schelde S.20 to 22, Arpin A-1, Alliet-et-Larivière Allar 04, Gloster F.18/37, General Aircraft GAL.33 Cagnet, Wiener Neustadt Wn 16, Fokker D-XXIII et 147, Latécoère 673, Byeryev B-10

• with lateral propellers: Mitrovitch MMS3, Praga E-48/51/52, Willoughby Delta F, Hamburger Ha/Bv 138, Lockheed 22 et 24, Focke-Wulf Fw 189A to D, Fokker G-1 et T-VI, Fouga torpilleur, Hughes 1936 et X-608, Blohm und Voss P.42, Gotha P.3001/3002/E500, Luscombe 6-passenger, Boeing 320

• special: Gribovskiy G-17, Airspeed AS.31, Republic Super-Clipper

Other issue: the twin-boom prototypes having taken off in 1946 are likely to have been designed the previous year. Till the end of the 1940s, with a decreasing probability, the same possibility remains for projects whose genesis is not described:

Eldred floatplane, Lasserre G.L.3 Libellule, Kaiser-Hammond Aircar, Anderson-Greenwood AG-14, Alliet-et-Larivière AL.06 Frégate, Portsmouth Aerocar, Aernova Pellarini AER.1, Aliexieyev I-218, LIT racer, HWL Pegaz, Boggs Airmaster, Nord 1480.

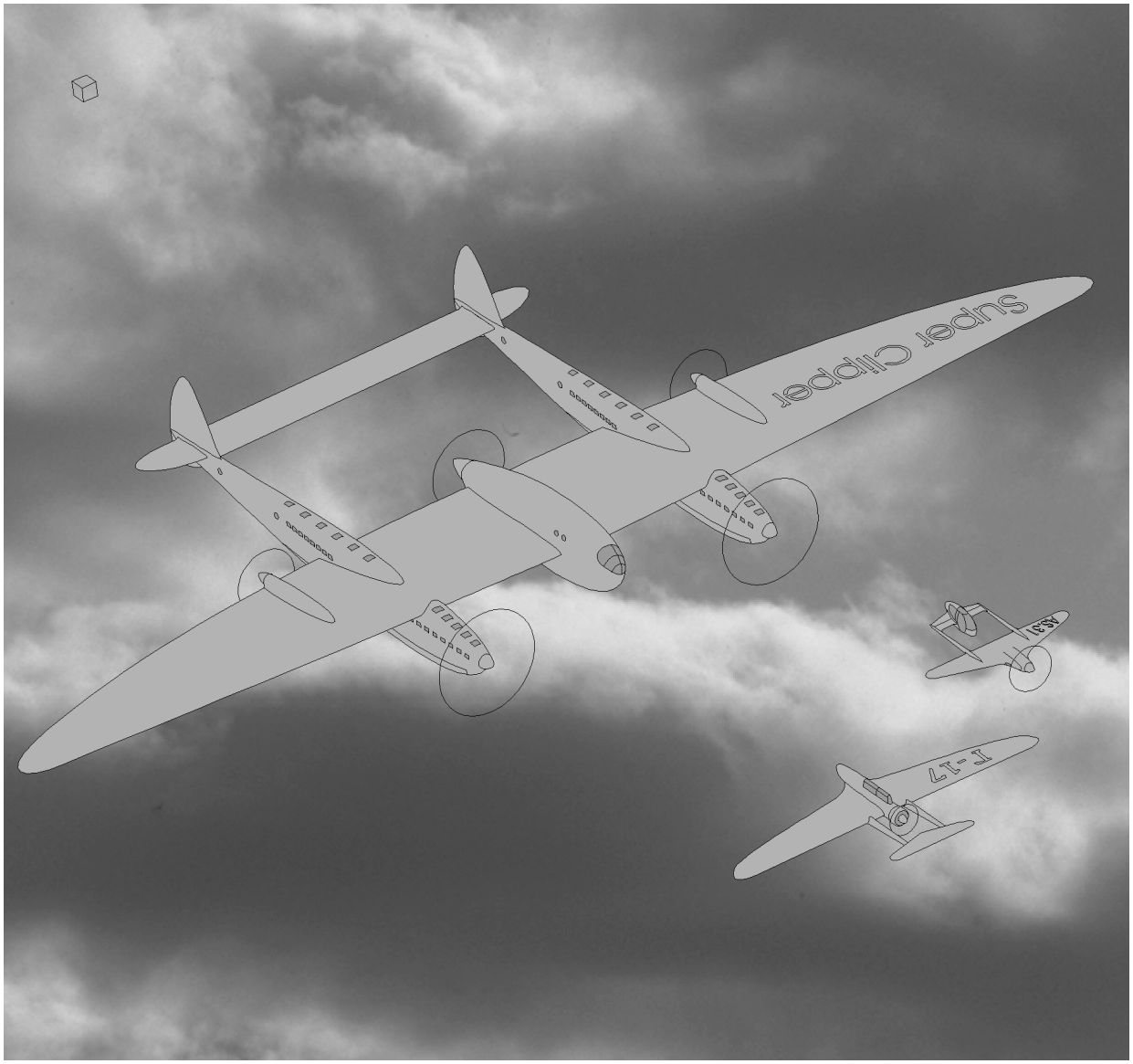

Debate n°3 — Classification

* Overview

Some reader or expert may condemn this book as not respecting the way aircraft MUST be classified – while there is not only one, not at all…

With a computer database, all would be simple: each line (plane) matches many columns (subjects, features, characters), and the reader can sort all the information according to personal preference. But without computer, in a classical paper-encyclopaedia, it was alas necessary for the author to choose a presentation and only one. The overview could be handled chronologically if design history of each project were known precisely, or else alphabetically… according to something (manufacturer name, project code, intended use, country...). Here, the subject was both morphological (twin-boom) and historical (1939-45), and it was decided (as explained in the next debate) to forget History (military and national centering).

Focusing on shape layout, a difficult problem was met with the bivalent models: for example, should the twin-fuselage version of the P-38 be associated with the other twin-fuselages or else with the other P-38s? if this had been the only case, it could have been used as transition, but this is impossible for many connections in several directions. It was thus decided to build the review plan on the general layout (twin-fuselage family etc.), rather than on detail resemblance (P-38 family etc.).

One way could have been the aviation classical groups seaplane/landplane/autogiro, or jet-plane/propeller-aircraft/glider, but it seemed better to focus on the specificities of the twin-boom group. Here are a few twin-boom features that can be matched or not on each twin-boomer:

- motorized booms
- inhabited booms
- booms linked in a single tail
- external tailplanes outside of the booms
- fins on booms
- pod between booms

It was decided, among them, to select here “pod-between-booms” as main criterion.

* Details concerning the selected way

One advantage in focusing on the “pod-between-booms” detail was creating a special class for the planes without central pod, gathering the weird double-planes, inside a general logical classification. The twin-pod model P.125, interpreted as double P.111, could be a problem, but this hypothetical detail seemed negligible.

More seriously, the models with booms-on-pod (R.21) had no place in the dichotomy "with or without pod", and this justified the creation of a third group.

Of course, each class includes original cases, showing exceptions to the simplified rules: booms at the wing-pod junction (RX-2), additional micro-pod (He 111Z), faired pod (Hi 24), completely removable pod (GT-1), booms aligned with the pod (Hall Flying Car) or pods (SSSR-123).

* Secondary ordering

Rather than granting a sub-chapter to each morphological anomaly, we preferred keeping 3 great families, before adopting an explanatory level as second classification criterion.

This explanatory way could have been followed from beginning to end, without morphological criterion. Here are bases of reclassification:

- Extracted from chapter 1.1, the jets would join chapter 3.3, and the cargo would join 3.2, while the remaining ones would make a group “flattened fuselage”, where the Hi 24 and Br 850 would be mentioned.
- Extracted from chapter 2, a group of giant planes would be defined, a group of double-planes, a group of small twin-hulls.

Debate n°4 : Bombs and svastikas

Several criticisms were feared, concerning the half-historic character of this book. First of all, a feminine frown, disgusted by the book title: "so you are enthusiast about killing machines!". Oppositely, a retired WW2 soldier would be shocked by the removal of guns and roundels: "this is insulting my heroic fight for peace and liberty, young bastard!" – and the fatal blow would come from a Nazi-hunter: "you admire some Messerschmitt that would have prevented Auschwitz liberation, you criminal monster!".

This is so severe and contradictory that such misunderstandings must be answered, step by step.

* Romantic

While being lucky to live in peace (this book was written in France 1997), having a passion for war may seem disgusting: the History pretext could hide an unhealthy pleasure in watching murders (while taking commonly secret pleasure through photo-magazines featuring burnt or bloody victims, of earthquake or else). War is an atrocity, loving war is kind of a guilt.

But this book is not at all guilty in this direction: excluding the mass-produced planes that have killed, no matter the pleasant thrill of most potential readers for warbirds, is not trying to please the dark sides of humanity. In a book about those years, seeing poetry in aircraft designs, not mentioning war events nor even weapons is courageous, pacifist up to reach absurdity and receive much spittle.

* Superman

Non-violence has clear limits: facing murder squads, one must protect the innocent, fight back. Approving this kind of heroism – individual, suicidal – while remaining hostile to the nationalist enrolments, is not suspect at all of sympathy towards totalitarianism, national-socialism (Nazism) nor French Petainist patriotic spirit that fought the British and American.

Without raw antimilitarism, it is obvious that the armies nowadays (it was in 1998…) deserve some prestige, but this is related to their "secondary" missions, not nationalist – sea rescue helping victims, including foreign ones, and interposition decided by the UNO, with volunteers preventing violence between countries or communities.

* The anti-Semitic issue

While the second world war seems based on imperialist and patriotic combat, it is also presented as a humanistic war against racism, against the concept of submen. However, the 1960s' events proved that the winners of 1945 did not abolish at all apartheid in the USA, nor adopted the law "one man one vote" in French Algeria, for example. Admittedly, the History books and former generations tell that, during the years 1939-45, only the Nazis and their allies *exterminated* the scorned people; this would justify to present, against an awfully bad side, rather-nice armies – dropping on the terrified Dresden/Tokyo civilians millions of incendiary bombs for the good cause: love for everyone...

There is a huge distance between *admitting alas* and celebrating with clapping hands. This author prefers imagining that pretty and clever aircraft would have been designed whatever the circumstances, and their military use in massive slaughters seemed unpleasant.

But in a book centered on 1939-45, it is not allowed to refuse realities: this is very severely condemned, via the charge of negationism. Mostly, neglecting the Shoah is assimilated to promoting racial hate…! It was thus obligatory to answer, to argue, to deny.

This author has no sympathy at all for the half-Nazi revisionists, who pretend *objectively* proven that Auschwitz was not a death camp and Adolf Hitler was an angel; then it should be allowed to choose between remembering and forgetting, on a purely *individual* basis. Somebody whose peaceful and shy opinion is "I personally prefer not to believe in these horrors" wants to be blind like an ostrich, but prosecutors pretending he is proven heinous and proselyte ("negationnists are murdering the Memory of Humanity") are absolutely dishonest, or blind differently. It is famously true that “racism is anger in the wrong direction” but through manicheist over-simplification, many antiracists display just another “anger in the wrong direction".

* Analyze of an injustice

The hard moral condemnation undergone by "ostriches" is perhaps related to the principle of "intolerant generosity": the people foreseeing a luminous way, leading to some harmonious future for all, naturally tend to condemn the divergent opinions. "If you do not follow my way towards the Good, you are on the Evil side". We have been told that Galileo, by considering peacefully that the Earth is rotating, had dared to resist the religious Law, and was thus treated as an awful accomplice of murderers (resisting the command not to kill); in the same way, an angelic nun saying that Hell cannot exist since God is Love, would have been burned alive as satanic because she would have removed the threat of divine punition against potential monsters; dogma and amalgam are fully unjust, while not incomprehensible.

Other explanation: wishing universal fraternity, a world of individuals without innate "nobility" nor "culpability", forgetting the meaning of words like *race* and *nationality*, would suppress the discriminatory concepts such as "Lords race" but also… "God's Elected people", so this generous humanism is declared anti-Semitic, thus racist and leading to genocide...

* Imperfect laws

Far from dishonest puns and from vertiginous rhetoric extrapolations, assimilating any contradictor to a forthcoming exterminator, French legislators have simply prohibited any doubt concerning the veracity of the Shoah (Fabius-Gayssot law); alas, this is still far too wide and condemns innocents, put in the same dirty bag as the Nazi revisionists: a whole branch of philosophy (skepticism), as well as a particularly pacifist religion (Indian Buddhism), are based on the generalized practice of doubt and a feeling of no-knowledge anywhere – and there is no evil involved: if one does not cut the throat of his neighbors with his teeth, there is no relation at all between this quiet wisdom and the fact that werewolves have actually existed...

In addition, agnostic philosophies remain perfectly valid as far as rationality is concerned; they are not at all destroyed by the "scientifically proven truths", those ones representing only one possible faithful reading of revisable models, formulated after a free choice to believe in apparent facts (arbitrary refusal of the dream hypothesis)… Historical agnosticism is simply a weird philosophy and prohibiting it was abrogating freedom of thought. Many people have absolute certainty, and concrete evidence according to their criteria, but this faith does not justify to throw in jail people having doubts. Decreeing that unbelief is a defamatory insult or a pathological symptom provides no explanation but proves that a totalitarian drift has started. Freedom has been officially killed, in France – as starting point in the Western World?

* Preventive logics

Pure theoretical thinking, far from practice and testimony, is regarded as irresponsible, in our countries. The holy "memory duty" (towards the Jewish Holocaust) is prescribed as the only way preventing another genocide, so an amnesic approach should be judged, not only through freedom right, but in matter of actual effectiveness.

Before claiming that silence is the very enemy of prevention, please think of the rare journalists feeling uncomfortable considering (or understanding…) that terrorism is murdering innocents to raise much audience, to frighten and concern electors through the news – silence and secret may suppress terrorism logic more efficiently than all armies; it is also notorious that the weather forecasts announcing wind and fire hazards are pleasing pyromaniacs and leading them into action; in Ulster, the solemn commemorations of past violence often leaded to street battles; in Bosnia, the grandchildren of communities having slaughtered one another in 1939-45 made new slaughters to avenge the crimes that had been told to them... The "memory duty", base of tribal spirit, can be suspected of leading to community hate at least as much as the right to forget.

In addition, French historians told that, until the repatriation of the Jewish Algerian ghettos in the 1960s, all the Jewish French community tried to be unobtrusive, without reminding publicly the Shoah drama and French complicity, because insisting ever and ever on the community frontiers causes segregation; there was a great wisdom in this point of view, and even if it is masked today by the shouts of some excited, there remains a respectable opinion – quiet Semitism, completely away from anti-Semitism. Moreover, requiring hereditary resentment reminds the very bad charge for "Christ-killing people" shouted against innocent Jewish generations; if lessons of the past should be remembered, why committing the same mistakes?

Other major point: if in the 1890s, the French civic education had given up repeating hardly that Alsace and Lorraine had been stolen from France, there perhaps would not have been the revenge spirit which led to the 1914 war, the Versailles Treaty sanctioning Germany, the anger of the German people, the election of Hitler; the forgetting attitude could thus have generated a 20th century without the horror of Verdun and Auschwitz...

Historians presenting dangerous mechanisms, and calling upon the intelligence of each individual, are helping peace, but they may be completely wrong when they pretend to say the Very Truth to obey, when they separate the World forever into victim families and torturer families.

* Educate in understanding?

It is careful and useful to keep in mind that absolute abominations are humanly possible, but to consider specifically holy the “crimes against Humanity” (defined especially for the Jewish, not considering the very similar genocide of Native Americans…) leads to strange discriminations: the slaughter of Oradour children may be *forgotten-because* they were "unspecified" victims and not Jewish victims, whose murder would be unforgettable…

To modify the formula "against racism" by adding "and against anti-Semitism" is also shocking, since the first part contains already what expresses the second, and all the victims of racism should cause an undifferentiated compassion, to be simply coherent. It is disconcerting to hear shouted a slogan resembling "I hate the racists, mainly the black-skin ones". For *all* racisms to die out, the best would be forgetting groups and communities, to consider each individual by itself. Facing people that are persuaded, by a few events or rumour, that "the Gipsy is a robber, the Arabic is a terrorist, the Black is lazy, the Jew is selfish, the non-Jew is anti-Semite", it would be useful to encourage understanding the misleading attraction of generalization: even if a class counted many bad ones, it would be wrong to spit on the nice ones (and neutrals) that are included also. If this individualist approach were regarded as the good direction, popular racism would disappear. Curiously, the (French) intelligentsia pushes in an exactly opposite direction: denying individual specificity, for pretended psycho-sociological reasons (inspired by Marx theory or a misunderstood statistical tool), the "thinkers" claim "excuse this malicious individual – he is not guilty, his behavior is explained by his coming from such class", this is considering latent criminal tendencies for the whole class, which is disseminating the roots of racism.

* A suicidal paradox?

Is it right to treat the young non-Jewish as forthcoming murderers if they express their lassitude with the daily reports and movies pointing out the Nazi Holocaust? Is not there an obvious risk to cause some exasperation, and thus un-friendship, or even more?

An explanation to this foolish risk would be a provocation by some activists, claiming wrongly to represent the Jewish community, and wishing to revive an unjust persecution in the greatest tradition, or to save the identity of the Jewish group by leading the surrounding population to reject it. This author, himself of probable Jewish ascent, shares the psychological tendency to sadness and martyr, but wanting to share this misfortune with beloved ones is a bad drift. Let us hope this hypothesis is wrong.

* Borders and roundels: on the way towards the next war

The main problem of our time (1998…) may be the huge wealth difference between the West and the Third World. It is not right to be condemned to work twenty hours per day for a half bowl of rice just because of your birth location. Kings’ wedding in the Middle Age or war conquests of forefathers bring absolutely no moral justification to borders... History and Tradition seem to be used as alibis, hiding the two powerful motivations of nationalism (and other communitarism): restricted solidarity (freedom to feel good not sharing with billions of poor), and superiority over the foreigner (even if one is ugly and socially dominated). A true justice in this world, that would be based on merit (or equality), would not at all reach majority in votes, seeing the tremendous popularity of lotto and princesses...

Even if we admit a principle of universal selfishness (keeping or giving provides self pleasure), it is difficult to understand national preference: why refusing to see that some compatriots are awful (rapist-killers of children etc.) and some foreigners are nice or even lovely? Why the nationality of a sportsman would prove he is more sympathetic and interesting than his opponents? Why do the proudest democratic humanists ("1 man 1 vote") consider in UNO that 1 Swiss is 200 times more important than 1 Indian, avoiding to take into account the opinion shared by the majority of human beings (in particular concerning the full right of migration towards the rich areas)?

While, in France, nationalism is fought in its hardest form ("purifying"), with much lyric force, these speeches seem to be lies while keeping the opulence accumulated inside armed borders. A very violent World revolution of the poor could happen: attempt at massive invasion of Europe and USA, nuclear missiles in return, and finally avenging slaughter of babies...

This horror could be prevented by abolishing borders, founding 1 World democracy, but Westerners refuse completely to loose their aristocratic privileges. The generations of the 22nd century could be disgusted by our selfish attitude if the concept of nationality has disappeared by then – they will judge us as immoral as we judge the past slavers and colonizers.

That is why there is no flag nor country name in this book, as a shy step towards a better world.

* Alternative cataclysm

Another solution could cure World imbalance: Asia would peacefully complete ruining us, through the Market law and monetarist logic. We cannot forever use decreasing auctions (buying the cheapest) for import without seeing the same logic – that provides misery to the producer countries – touching our own production. If loyal competition is accepted, our incomes will fall down completely, and if it is refused, the prices will grow up awfully; in both ways, misery is coming.

To become again good competitors, our money needs perhaps to be devaluated massively. Then, instead of buying 10 products with 9 of them from poor countries, we would only be able to buy 2 products – local without transport costs – restoring local employment (doubled manufacture here) and misery (local purchasing divided by five)...

Protesting that it would be an inadmissible return to Middle Age poverty is part of the refusal to loose privileges; such "historical" arguments would have prevented the abolition of slavery, and our Western current richness came from the under-payment of raw materials and labour in the old colonies (for Europe), from the legal property over stolen land (for America and Australia). While recent History seems holy to justify hereditary domination, this author prefers honesty somehow.

* Dark conclusion

It is necessary to admit that the intentional absence of roundel and country name in this book is linked to an abnormal sensitivity, mixing mondialism and individualism, opposite to the usual "communitarist" opinions – patriotic or European, familial or communist, anti-Semite or Zionist.

This incongruity is related to a very pessimist imagination, considering that “World war 3" would be avoidable only by giving up heirs (historical, national, familial…), seen as injustice, root for revolution. This will be refused for sure, and the race goes on right ahead, till we crush on the wall. This author does not hope to stop it all, as another saver/leader, he has simply stopped running, and will be crushed, trampled. With some spittles as bonus...

Debate n°5 : Presenting silhouettes

In traditional aeronautical books, illustration associates two components: "3-view" drawings (profile, from above, frontal), allowing strict comparison between models, and photographs or drawings from varied angles. Here, it was imperative to innovate in illustration, as the subjective discussion upon the History of each project (related events, intended action) was voluntarily truncated – see the preceding debate.

* Standardization

For original drawings, not copied, "3-view" drawings were not appropriate, since more than half of the twin-boom projects 1939-45 had already been illustrated this way. Conversely, views from varied angles do not allow to see at first glance the differences between derivatives, nor the links between independent projects. So a common angle was chosen for all aircraft. Accepting the risk of monotony.

* Simplification

Standardizing angle was difficult on the ground, with many landing gears of unknown position and length, so in flight views were selected. On the other hand, it would have been necessary to draw pilots in the cockpits, which was complex (and unaesthetic according to this author). It was thus decided "to glaze" the planes with opened cockpits, and to make all glasses opaque. Reducing the dreamed flying aircraft to aesthetic silhouettes, the wing flaps were ignored, as well as exhaust pipes, pylons, frames, non-streamlined fixed landing gears, etc. These ablations, realistically incredible, were coherent with preferring pure hypothetical concepts rather than noisy machines ready to take off for action. However, air intakes were respected (to show the cooling logic), as well as tail flaps (to understand the tail shape).

Last point of simplification: the absence of focal effect. Applying an unrealistic “parallel" or "isometric" projection, the advantage was a constant scale from the starboard wingtip to the port one. This made also possible to include with the drawings a scale indicator (cube of 1 meter side = 3¼ft), giving a useful reference mark.

Concerning lights, the background sky is included without any claim of realism: the tones on the planes are not adjusted with the ambient luminosity, as the item grouping was changed till the end, because of continual discoveries. In addition, the silhouettes remain "flat", without meticulous work on the shadows and reflections. It would also have been possible to bring 3-dimension aspect to the nacelles and booms by drawing curved panel lines (these lines, which very seldom appear on photographs, paradoxically give a realistic effect to the drawings - see a specific test on the Kombain page 4). So a more “true” aspect would have been possible, but spending 10 times more duration on drawings.

* Imagination

A difficult choice concerned aircraft known only from a hazy text description. Was it necessary to give up illustrating them, fearing to be ridiculous when future publications occur? This author judges there is more fun than shame in having been wrong. Example below: the SAM-19 before and after further information...

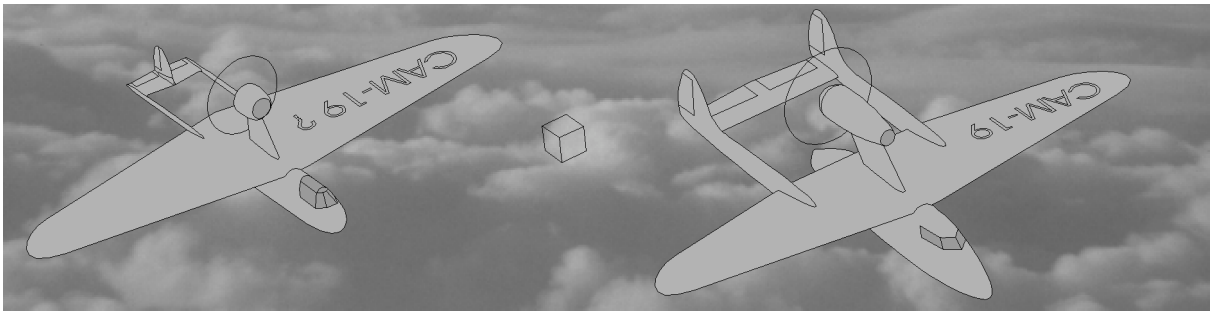

This soft realism, without conviction, can however seem contradictory with the choice to exclude firmly drawings dated 1938 or 1946. It should be conceded that it would have been pleasant to carry out a work completely disconnected from History, illustrating only splendid and incredible imaginary twin-boomers, but the *publication* of such a heresy seemed impossible.

All this explains such a paradoxical book, without fiction in the selected topic, relatively severe concerning chronology, but completely away from usual standards. Crazy, some will say...

Debate n°6 : Bibliographic credibility

What has just been said previously about avoiding secret copies and accepting unrealism is somehow related to the bibliographical subject.

First of all, the author of this book, even if generating original views through personal calculations/programming/drawing, is indebted to other authors concerning the raw material: basic illustrations, scales and dates. The list of books and magazines used is given below.

Anyway, as far as this author is concerned, there is no claim at all to say the Historical Truth. The goal was simply a collection of models having been presented as "twin-boom project designed between 1939 and 1945", even by mistake or as jokes. Gathering data may be done without trusting sources. This author would not regret at all having written the current book, if he discovers someday (in a lamasery or an asylum) that no year before 1970 ever existed...

Sources

- *Periodicals*:

Aeroplane Spotter, Les Ailes

Histoire et Maquettisme, Air Enthusiast, Air International, Le Fana de l'Aviation, Aviation Magazine, Flaps, Flying Review, Flypast, Airpower, Aeroplane monthly, Luftwaffe 1946, Wings of fame, Le Trait d'Union, Aviatsionoyé Obozriéniyé, Avio, AAHS Journal, Biblionorme, Aéro Revue, Air Classics, L'Ala d'Italia

- *Collections*:

Reichdreams, Squadron Signal, MBI Bily, Minidoc, Aireview

Putnam, Docavia, Jane's All the World Aircraft, Warplanes of the second world war, Aircraft of legend, Encyclopédie illustrée de l'Aviation, Schiffer Military History, Albums Heimdal, Dimensione Cielo, Ian Allan Aircraft Albums, Air Britain Publications.

- *Isolated Sources*:

Mustang Designer, De Havilland Vampire: the complete history, Spitfire: the history, Messerschmitt O-Nine Gallery, Fokker: aircraft builders to the world, Les Avions Renard, Segelflugzeuge Hirth, OKB Sukhoi, Ho-ward Hughes and his Hercules, Howard Hughes and his flying boat, Howard Hughes: his achievements and legacy, The Thunder factory, Interceptor fighters for the RAF 1935-45, Civil Italian and Military aircraft 1930-1945, Die Deutschen Luft-rüstung 1933-1945, Die Deutschen Flugzeuge 1933-1945, Paper plane of the third reich, Geheimprojekte der Luftwaffe: Jagdflugzeuge 1939-45, secret Luftwaffe projects 1939-1945, German jet genesis, U.S. fighters, The american fighter, Ceskoslovenska letadla, Aircraft of the Soviet Union, The Osprey encyclopedia of Russian aircraft, British gliders and sailplanes, The complete book of fighters, Autogiro: the story of the windmill planes, Macchine bizzarre nella storia dell' aviazione, The world's worst aircraft, Fighting gliders of world war II, Vojenska letadla, Aerosphere 1942.

- *Various files and copies*:

Archivio D' Amico-Valentini; collections of Justo Miranda, Herbert Léonard, Nigel Eastaway (sincere thanks to these generous ones).

Mentions without any visual base (leading to provisional drawings in this book):

Blohm und Voss P.61/123/124/125, DFS 25, Dornier Do 435Z, Fokker D-23 DB, Heinkel He 111Z 3m/4m, Junkers EF-135, Messerschmitt Me 409-1m/509Z, North American RD-1120/NA-116/Twin-51G, Piper PA-7, Payen Pa.150 Otarie, Brewster P.33 Rev.II, SAAB J 21B/L.13/RX-2-twin-jet, SNCASO SO-1070.

The problem of Payen projects

Several Payen projects of twin-boomers could have been illustrated here if they had not been hidden by historians wanting to reveal them by themselves as bright (and expensive) scoop. If such attitude had been met at the beginning of this book building, it would have directly led to its cancellation: no need to look for true information, when it is jealously kept by some, whereas we can invent other possible universes, even more pleasant – what-if…

Drawing recipes

Readers may be curious to know which technique was used to produce the original oblique views illustrating this book, in spite of their imperfections. Far from being a secrecy hidden jealously, this procedure can be used by everyone, now with a common computer.

"3-D" goal

Software products have become so user-friendly, there is no need anymore to handle mathematics to generate views of a non-existent object. Just define the thing in three dimensions ("3-D"), then turn around virtually, choosing the best camera, distance and light.

Such sequences, three-dimensional, are often presented by the large aeronautical manufacturers; non-professional software, on the same principle, presents splendid views with spheres, vases or glasses, done in a few hours, with fabulous effect of reflections, shades and transparencies ("ray-tracing") – and at first sight, airplane virtual models could be treated just the same.

Alas (in the 20th century…), the industrialists conceiving in three dimensions planes on computer did invest a lot for that, while the little 3-D software for microcomputers were badly adapted to a shape as complex as a plane of the 1940s (Karman connections, highly framed canopies...). And to get views of several dozens of airplanes, therefore spending hours on each one rather than months, it was mandatory to simplify shapes a lot, up to loosing any resemblance to the original. Pseudo-photographic quality seemed impossible.

The picture of P-38 Lightning below was produced using Corel cliparts-3d (simplified virtual models), seen with a wide angle lens (24mm, 1”) with Ray Dream software.

Art coming back

Painters devoting their work to aeronautics often use secretly a fast and simple basic technique: transferring a photograph and inventing only colors and backgrounds. If a plastic model is available, it is even possible to choose a personal angle to photograph, for producing a completely new image.

Alas (in the 20th century…), almost no cancelled project was available as plastic or resin model. The basic source was generally a rough plan produced by a design department. So, this author has invented (or invented again if this was not new) a technique, that can be followed with old tools (transparent paper, pencil) or with modern tools (scanner, vectorial software):

1) Photocopy a 3-view drawing, in 3 copies
2) Stick each view on a carton, and photograph with the chosen angle
3) On a transparent paper over the photograph, manually draw the shape that would generate the 3 projections
4) Add colors and background.

Steps 1, 2 and 4 are easy. Step 3 is artistic approximation (the situation is a little less subjective if many cross-sections are available and included); this phase may take about 4 hours per plane, when one controls correctly a software like Corel Draw 6.

The try below is based upon Rene Francillon's plan in 'Lockheed Aircraft since 1913', Putnam publisher.

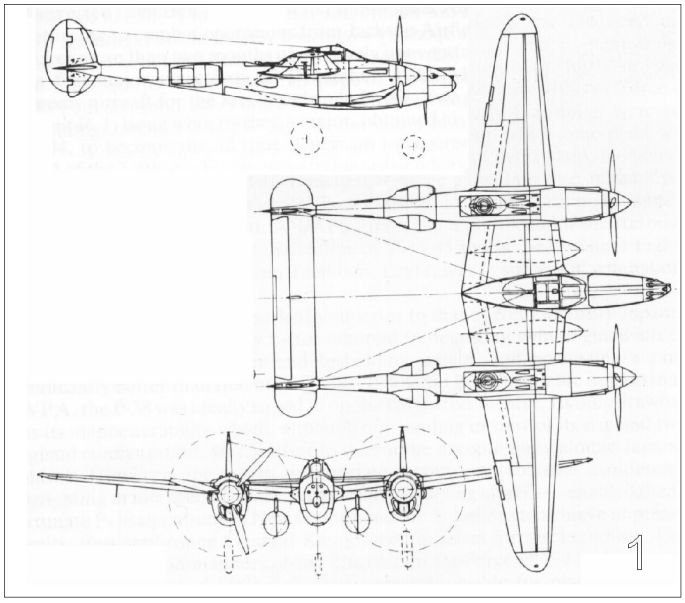

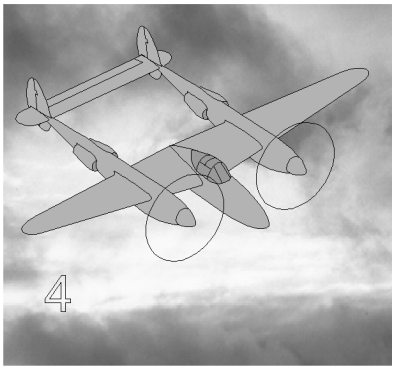

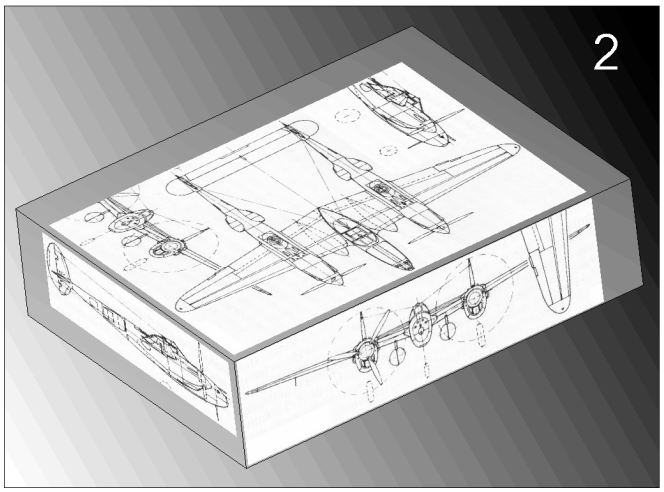

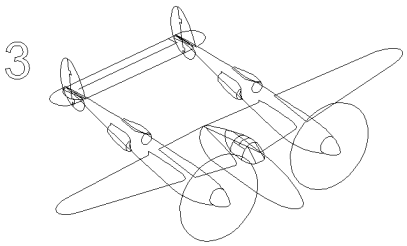

With the mouse only

A photographic step presented two drawbacks:

- it is difficult to standardize the view angle, to treat several planes with the same angle (including the rare item discovered two years after all the others...)
- it was (in the 20th century…) complicated and long to go and buy a film, install and set the camera, carry the film to develop, return after development, order a big-size print of the best shot, return to get it...

Another way, purely on computer, seemed better:

1) Scan a 3-view drawing, then vectorize it (i.e. transform the pixel batch into line serial)
2) Apply to the 3 views an angular deformation (to be calculated)
3) From the 3 deformed views, manually redraw the plane
4) Apply colors and a background.

Step 2 adds a difficulty here: to apply in a coherent way a deformation to each view, it is necessary to control the mathematical projection, and thus trigonometry. We will further (page 94) provide the formulas ready for use, avoiding this difficulty.

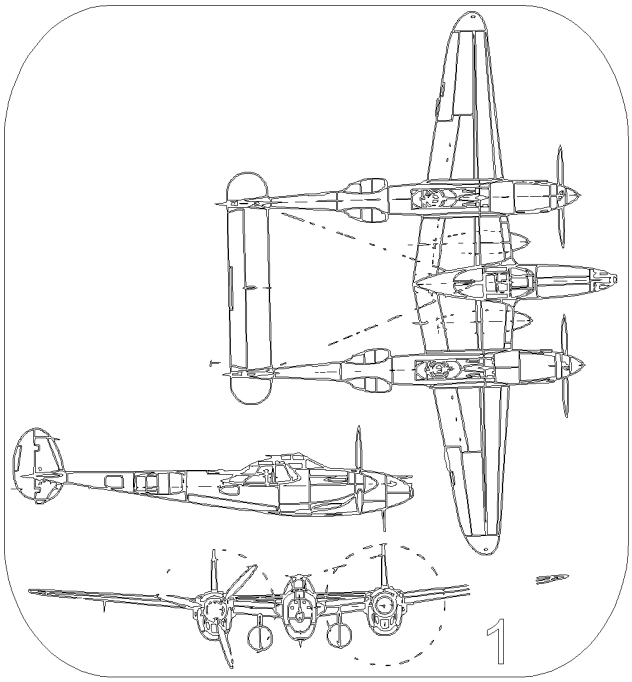

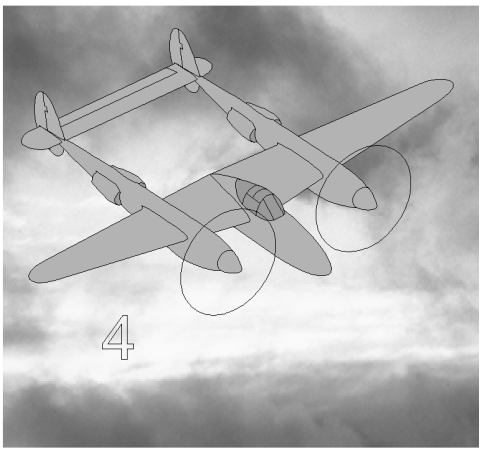

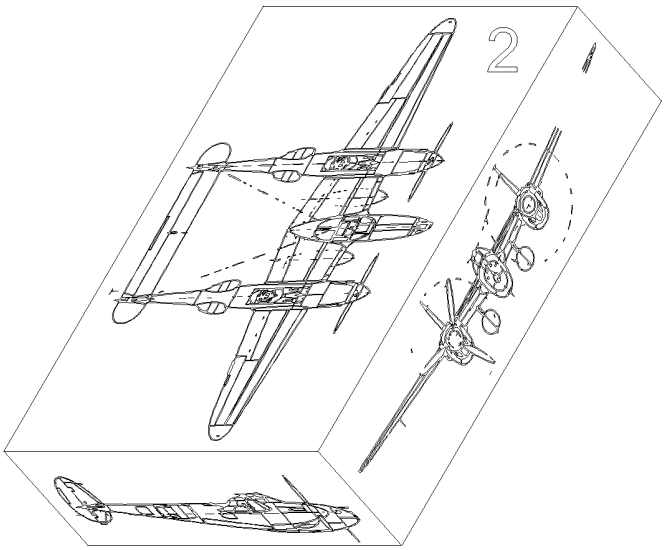

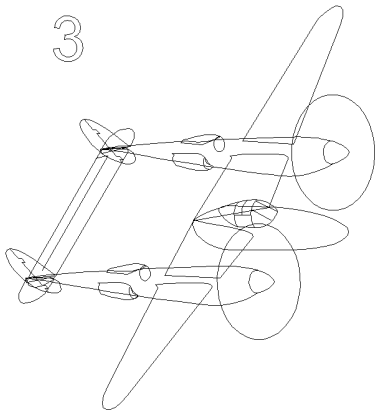

From art

Reversing the formulas mentioned previously, an oblique view (art or line-drawing or photograph) can be used to create a 3-view drawing.

1) Scan the picture and place it in background of a vectorial software
2) From the volumes, trace the lines which would appear on a 3-view drawings then remove the picture and require the calculation of intermediary lines, in order to identify the median axes
3) Extract elements specific to each view, as well as the median axes.
4) Bring back to orthogonality the 3 views (factors to be calculated – see page 97)
5) Correct the inconsistencies seen between views, and asymmetries; for the profile view, correct if needed the conical effects which for example reduce the rear.
6) In the example below, it is possible to compare the result with the 3-view drawing, which was available.

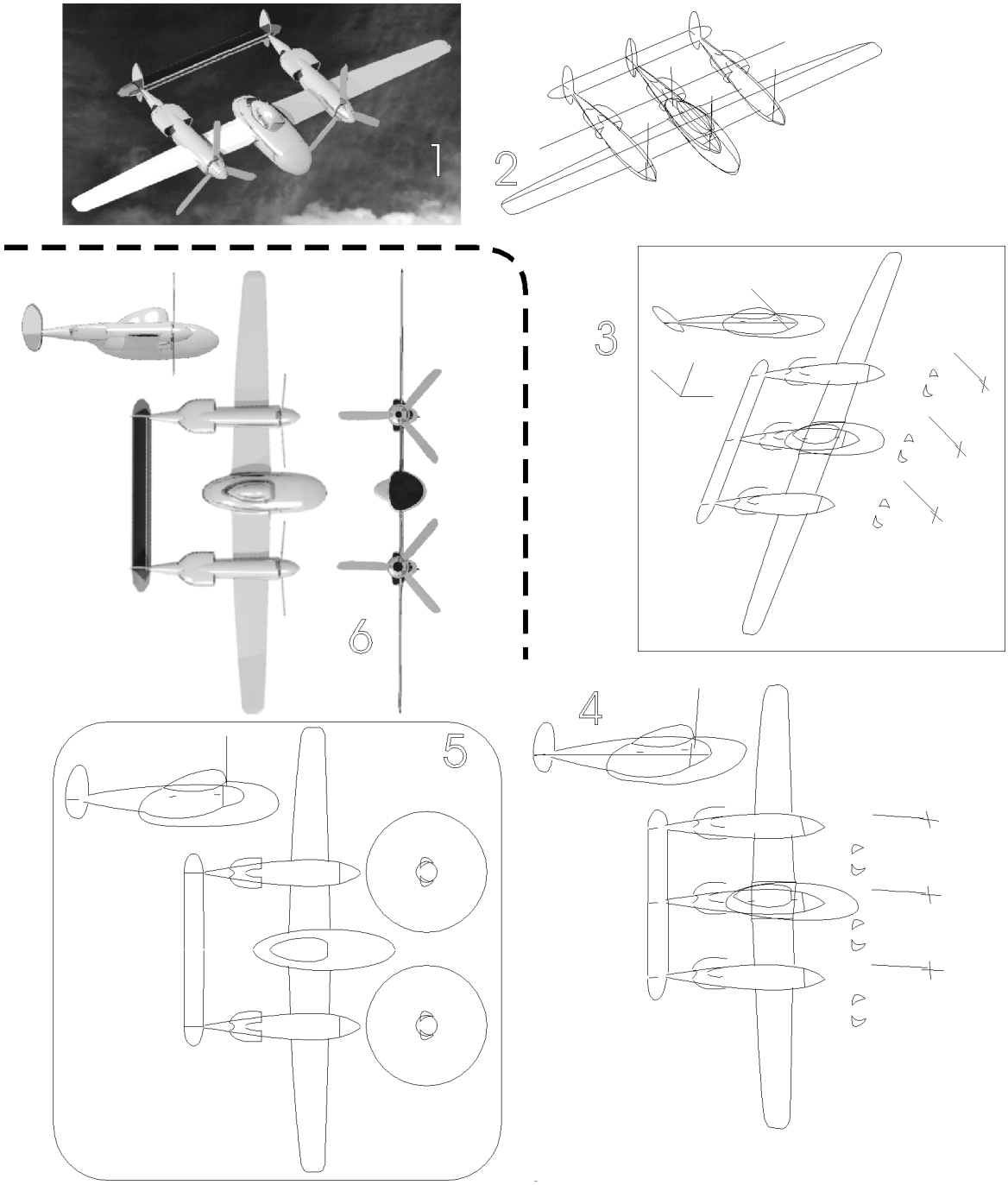

Choosing a viewpoint

An infinity of distinct views are possible. Let us imagine the Earth planet like a hollow and transparent sphere, and place in its center the plane to be drawn, the nose directed towards the crossing of the equator and the Greenwich meridian; the point of view can be defined by the latitude and longitude of the observer. In addition, according to the distance to the center, the view will be deformed by a conical effect (or focal effect, or parallax: mechanism enlarging the close wing and reducing the distant wing). Finally, the image is defined by 3 figures: "longitude", "latitude", "distance" (and without effect on shapes: "rotation" and "enlargement"). Here, we have chosen the Distance parameter as infinite, corresponding to a photograph with huge zoom. Thus remain two essential figures: longitude and latitude. This way resulted in privileging the height axis, unchanged; however the fundamental axis on a plane is the lengths' one, as regards symmetry (to draw only half and add the mirror-image). Thus was retained another way: three axes x, y, z were defined with the initial position of the plane as this: nose towards x, fin towards y, port wing towards z; the eye view is according to z (like drawing the profile); then happens the first rotation around x, and then a second around y. There are still 2 angles to define the position of the eye compared to the plane, as with latitude and longitude, but now the lengths will keep their basic direction, horizontal.

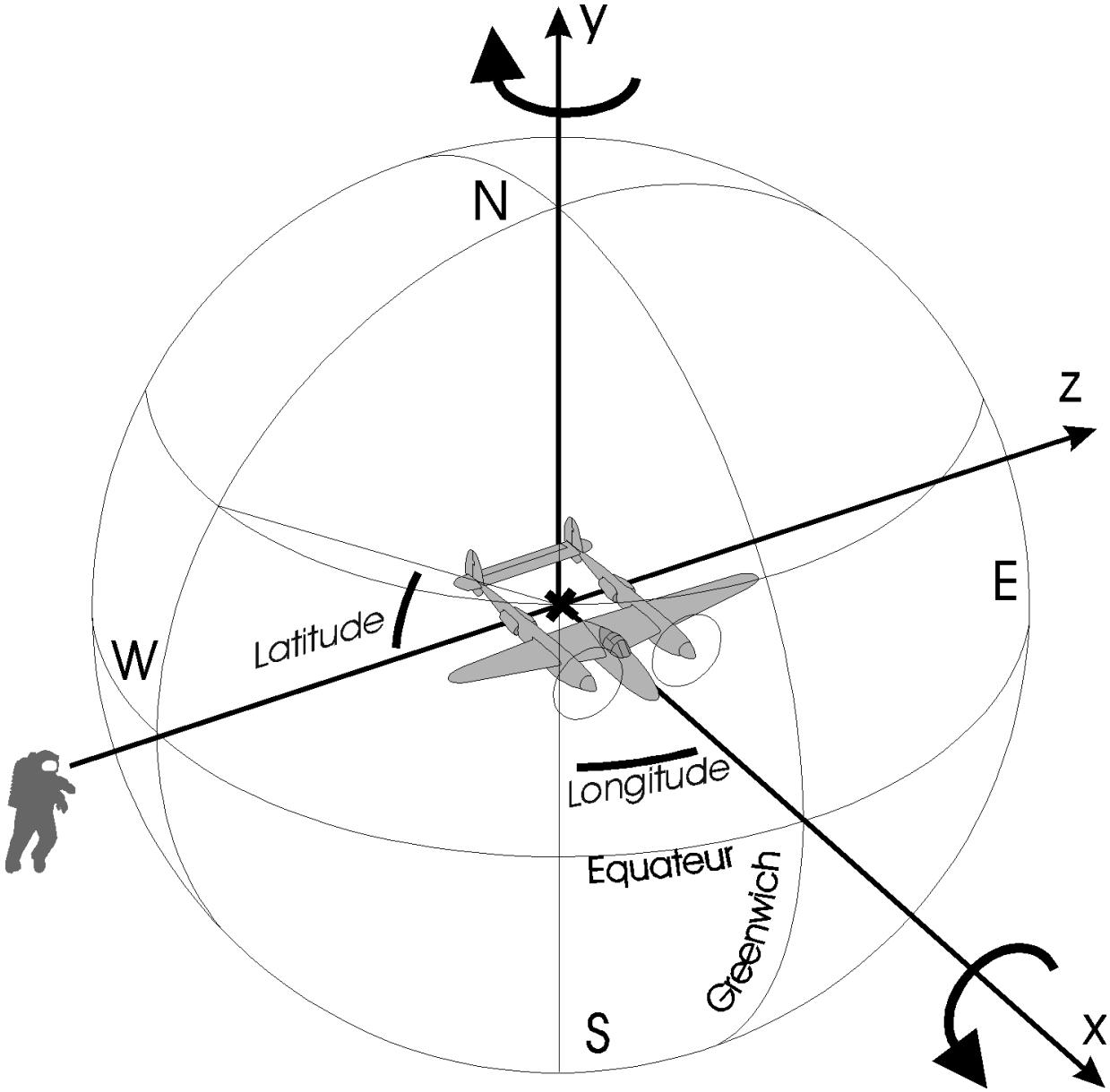

Calculation recipe

It would be possible to present here the detail of the trigonometrical demonstrations developed by the author, in ten pages, but that may be boring for most readers, while the math enthusiasts would prefer to reinvent the demonstration by themselves.

So here is only the result (in French, sorry): writing for an automatic spread-sheet tool (Microsoft Excel, 5.0 or more).

Practical notes:

- the titles Choix, Eléments and Valeurs must be in C1, C5 and C26 (i.e. on the third column, in 1st, 5th and 26th line), otherwise the formulas will be wrong.
- to generate the aspect graph, select the Visualisation area “abscisse” and “ordonée”, then use the graphic assistant, tracing a square, and employing XY mode with lines, without legend nor title, then adjust the scale: -1 to 1.5 for X, -0.5 to 2 for Y, finally: make the axes cross at -1 and -0.5.
- the angles are measured counter-clockwise.

		Choix du point de vue (saisie)
Angles (°)	autour de x (roulis)	
depuis le profil	autour de y (± lacet)	

		Eléments pour juger le point de vue
Observatoire	Latitude (° Nord)	=DEGRES(ACOS((C9)))
(nez vers 0°, 0°)	Longitude (° Ouest)	=DEGRES(ATAN(SIN(RADIANS(C6))/TAN(RADIANS(C12))))
Dimensions	Longueur apparente	=COS(RADIANS(C3))
	Hauteur apparente	=RACINE(1-(SIN(RADIANS(C2))*COS(RADIANS(C3)))^2)
	Envergure apparente	=RACINE(1-(COS(RADIANS(C2))*COS(RADIANS(C3)))^2)
Flèches	Envergure -> verticale (°)	=DEGRES(ATAN(SIN(RADIANS(C3))/TAN(RADIANS(C2))))
	verticale -> hauteur (°)	=DEGRES(ATAN(SIN(RADIANS(C3))*TAN((RADIANS(C2)))))
Visualisation	abscisse	ordonnée
sur un cube	=C8	0
	0	0
	=-SIN(RADIANS(C2))*SIN(RADIANS(C3))	=C28
	=B16+C35	=C28+C32
	=B16+C35+C8	=C28+C32
	=C35+C8	=C32
	=C8	0
	=C8+B16	=C28
	=B16+C35+C8	=C28+C32
	=B21	=C28
	=B16	=C28

		Valeurs chiffrées pour le dessin
Inclinaison	Echelle H	=C8
profil	Echelle V	=COS(RADIANS(C2))
	Incliner H (°)	=C12
	Incliner V (°)	0
Inclinaison	Echelle H	=C8
dessus	Echelle V	=SIN(RADIANS(C2))
	Incliner H (°)	=-C11
	Incliner V (°)	0
	Echelle H	=COS(RADIANS(C2))*SIN(RADIANS(C3))
Inclinaison	Echelle V	=1/C28
face	Incliner H (°)	=DEGRES(ATAN(-B16/C36))
	Incliner V (°)	=90-C11

Calculation example

With the spreadsheet detailed on the previous page, typing two angles in the entry box (double-framed) is enough to judge the view. After several tries, a satisfactory combination may appear, then record the "valeurs chiffrées pour le dessin" (values for the drawing) by printing the page.

Those calculations require entry angles (as well as latitude/longitude) lower than 90°, because the 3-view drawing which is used as a basis is made of profile/from above/front, without view from rear nor below. In addition, null angles are not considered, the goal being an oblique view.

For the drawings of this book, the point of view was selected with the following goals: reducing only by 10% the span for the booms to be well separated, getting a wing-fuselage angle of 60° to have a big difference with a view from above. From there were chosen the values below.

Choix du point de vue (saisie)

Angles (°)	autour de x (roulis)	**51**
depuis le profil	autour de y (± lacet)	**46**

Eléments pour juger le point de vue

Observatoire	Latitude (° Nord)	32.673
(nez vers 0°, 0°)	Longitude (° Ouest)	31.288
Dimensions	Longueur apparente	69.466%
	Hauteur apparente	84.176%
	Envergure apparente	89.938%
Flèches	Envergure -> verticale (°)	30.221
	verticale -> hauteur (°)	41.615
Visualisation sur un cube	abscisse	ordonnée
	0.69	0
	0	0
	-0.56	0.63
	-0.11	1.41
	0.59	1.41
	1.15	0.78
	0.69	0
	0.14	0.63
	0.59	1.41
	0.14	0.63
	-0.56	0.63

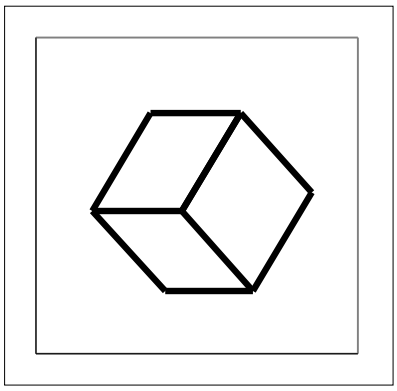

Valeurs chiffrées pour le dessin

Inclinaison profil	Echelle H	69.466%
	Echelle V	62.932%
	Incliner H (°)	41.615
	Incliner V (°)	0
Inclinaison dessus	Echelle H	69.466%
	Echelle V	77.715%
	Incliner H (°)	-30.221
	Incliner V (°)	0
Inclinaison face	Echelle H	45.270%
	Echelle V	158.902%
	Incliner H (°)	19.382
	Incliner V (°)	59.779

Drawing precise recipe

This author used the graphic software Corel Draw 6, which had many advantages, but 2 disadvantages:

- the Skew tool accepted only integers (and it was better to program a script handling decimals, the “SkewObject” script-tool handling millionth of degrees)
- the Scale tool of the menu was not available as script-tool, so the script could not perform all

Here is a script example (for the view from front, with Corel Script Editor 6):

```
Withobject "Coreldraw.automation.6"     .skewobject 19382000, 59779000, 9                End withobject
```

Finally, the procedure is:

1) place the 3 views so that the lengths are horizontal, nose on the right, and heights: verticals
2) apply the scales corresponding to each view
3) apply the skew angles corresponding to each view

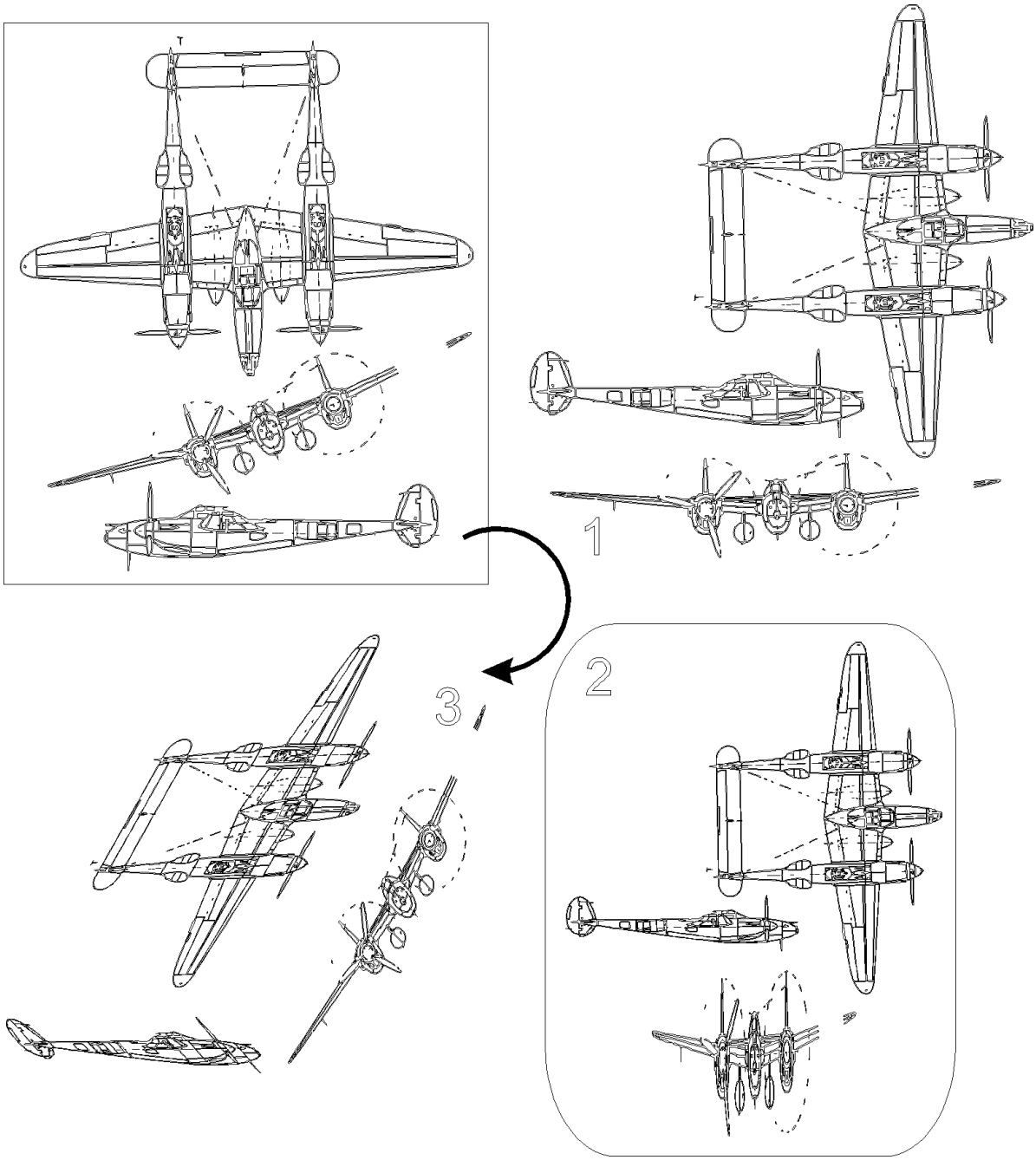

Help with decoding

To complete the tools description, here is the reverse one corresponding to page 92: to decode an art drawing.

Several ways were possible. One of the most promising seemed the analysis of the deformed circles (tires, propellers): the dimension and the orientation on their small side and large side could give access to the angle of observation. Nevertheless the propellers are often fuzzy, just as the tires' external line, while the rims are generally too small (thus fuzzy after enlargement) – and how to deal with a jet having a retracted landing gear?

It was thus decided to start with the angles "between span and vertical", "between vertical and height" (vertical being defined at 90° of the approximate length axis set as horizontal). Thanks to the lateral symmetry (of most aircraft), the span axis is clear; for heights, it is generally necessary to guess that the rudder is articulated on this axis, unless one propeller blade seems vertical fortunately.

Finally, the procedure is:

1) rotate the collection of lines from the picture for the lengths to be horizontal
2) if the wing is directed from below-right to above-left (instead of below-left to above-right), reverse the picture to restore the usual situation (the values of latitude and longitude will not be valid)
3) measure the 2 angles for the spread sheet
4) on 3 copies, apply the skew angles corresponding to each view, then the scales

		Mesures d'angle (saisie)
Flèches	Envergure -> verticale (°)	
	verticale -> hauteur (°)	

		Interprétation
Angles (°)	autour de x (roulis)	=DEGRES(ATAN(RACINE(TAN(RADIANS(C3))/TAN((RADIANS(C2))))))
depuis le profil	autour de y (± lacet)	=DEGRES(ASIN(RACINE(TAN(RADIANS(C3))*TAN((RADIANS(C2))))))
Observatoire	Latitude (° Nord)	=DEGRES(ACOS((C11)))
(nez vers 0°, 0°)	Longitude (° Ouest)	=DEGRES(ATAN(SIN(RADIANS(C8))/TAN(RADIANS(C3))))
Dimensions	Longueur apparente	=COS(RADIANS(C7))
	Hauteur apparente	=RACINE(1-(SIN(RADIANS(C6))*COS(RADIANS(C7)))^2)
	Envergure apparente	=RACINE(1-(COS(RADIANS(C6))*COS(RADIANS(C7)))^2)

		Valeurs chiffrées pour le dessin
Inclinaison	Incliner H (°)	=-C3
profil	Incliner V (°)	0
	Echelle H	=1/C10
	Echelle V	=1/COS(RADIANS(C6))
Inclinaison	Incliner H (°)	=C2
dessus	Incliner V (°)	0
	Echelle H	=1/C10
	Echelle V	=1/SIN(RADIANS(C6))
	Incliner H (°)	0
Inclinaison	Incliner V (°)	=C2-90
face	Incliner H (°)	=-DEGRES(ATAN(SIN(RADIANS(C6))*COS(RADIANS(C6))*SIN(RADIANS(C7))))
	Incliner V (°)	0
	Echelle H	=1/(COS(RADIANS(C6))*SIN(RADIANS(C7)))
	Echelle V	=1/C18

Index

In order to facilitate searching or checking, here is a list of all the mentioned items. The goal is to provide a fast answer to questions like: Was this model forgotten? At which page was this drawing? Where are all the twin-boomers of this manufacturer dispatched?

This wish to build an index was not simple:

- Was it necessary to list all the mentioned planes, even the Boeing 747 that was just mentioned as opposite to twin-boom? Finally, only the items corresponding directly to the subject were listed, adding however an appendix gathering the "borderline cases".
- Was it appropriate to include (in the alphabetical list) only the manufacturer names or every code and nick-name? Example: for Northrop XP-61/P-61 Black widow, either N only or N,X,P,B,W? Finally, the design team name was retained as single criterion for the list with page numbers, adding separately the list of related names (except nonspecific words like Type or Model).
- These related names list includes some (English) variants of the names written from other alphabets than Latin. The Cyrillic E and O (sometimes pronounced Yo and A, instead of Ye and O) have been written according to probable pronunciation, without full knowledge.
- It would have been possible to supplement the list with technical figures detailing each model (dimensions and weights, engine number and power, maximum speed, first mentioned date). However, that would have required many pages, full of unsure figures (the sources being often contradictory) and with many question marks. In the English/international version, the dual unit system would have been an additional problem.

Main list [between brackets: page number]

Weserflug P 2137 (37)
Westland E5/42 (8)
Wheeler (64).

Limits : [between brackets: appendix number]
Abrams P.2/PC.4 Explorer (2) ; Aernova AER.1 (2) ; Airspeed AS.31 (2) ; Albert bi-empennages (2) ; Aliexieyev I-218 (2) ; Alliet-et-Larivière AL.04/06 (2) ; Anderson-Greenwood AG-14 (2) ; Antonov KT (1) ; Antonov LEM-2 (2) ; Arpin A-1 (2) ; Aubert PA-60 (2) ; **B**estetti-Nardi BN-1 (2) ; Blohm und Voss Bv 138, P.28, P.42 (2) ; Blohm und Voss Bv.141, P.111/192/208/215 (1) ; Boeing 320 (2) ; Boggs Airmaster (2) ; Bréguet Br 803 (2) ; Burnelli A-1 (2) ; Byelyayev DB-LK, Dvukhvostka (1) ; Byeryev B-10 (2) ; **C**ampbell monoplane (2) ; CCF CB-34 (2) ; Cunliffe-Owen OA-1 (2) ; **D**e Schelde S.20/21/22 (2) ; DTD Biplane Fighter (2) ; **E**ldred floatplane (2) ; **F**ieseler Fi 168 (1) ; Focke-Wulf Fw 189A/D (2) ; Focke-Wulf P.0310.251.006 (1) ; Fokker 147/160/DXXIII/GI/T-VI (2) ; Fouga torpilleur (2) ; **G**eneral Aircraft GAL.33 Cagnet (2) ; Gloster F.18/37 (2) ; Gotha Go 237A (1) ; Gotha P.3001/3002/E500 (2) ; Gribovskiy G-17 (2) ; **H**amburger Ha 138 (2) ; Heinkel P.1078B (1) ; Heston A2/45 (2) ; Hughes 1936, X-608 (2) ; HWL Pegaz (2) ; **I**TS 8 (2) ; **K**aiser-Hammond Aircar (2) ; KB-2 PI/LSB (2) ; **L**asserre G.L.3 Libellule (2) ; Latécoère 673 (2) ; Letov S56 (2) ; LIT racer (2) ; Lockheed 22/24/X-608 (2) ; Lockheed Canard P-38 (1) ; Luscombe 6-passenger (2) ; **M**artin 142/193 (2) ; Martin Twin hull ocean plane (2) ; Michelet Rubis (1) ; Miles Magister Auxiliary Wing (1) ; Mitrovitch MMS3 (2) ; **N**ikitin PSN-2 (1) ; **P**ayen Pa.360/370 (1) ; Portsmouth Aerocar (2) ; Praga E-48/51/52 (2) ; **R**epublic Super-Clipper (2) ; **S**AIMAN LB.2 (2) ; Schmued-Beeman Twin Fuselage (2) ; SNCAC NC-1070/1075 (1) ; SNCAN 1480 (2) ; Stearman-Hammond Y (2) ; **W**eick W-1 (2) ; Willoughby Delta F (2) ; WNF 342 V3/V4 (1) ; WNF Wn 16 (2)

Related names [between brackets: name to check]
A-1 (Arpin, Burnelli) ; A-37 (Hughes) ; Adriano Mantelli (Mantelli) ; AER.1 (Aernova) ; Aerocar (Portsmouth) ; Aérocentre (SNCAC) ; Aérosudouest (SNCASO, Lasserre) ; Aéronord (SNCAN) ; AG (Anderson-Greenwood) ; Airborne Transport (Bowlus) ; Aircar (Consolidated-Vultee, Kaiser-Hammond) ; Airmaster (Boggs) ; Airsedan (Kotuba) ; AL.04/06 (Alliet et Larivière) ; Alekseyev/Alexeyev (Aliexieyev) ; Allar 04 (Alliet et Larivière) ; AM-6/10 (Mantelli) ; Ar (Arado) ; Arkhangelskiy (Mozharovskiy) ; AS (Airspeed) ; Autoflugzeug (Dornier) ; Auxiliary Wing (Miles) ; AV/AW (Armstrong-Whitworth) ; **B**-10 (Byeryev) ; B-29 Twin (Boeing) ; B-2000B (CCF) ; Ba (Breda) ; Bat (Mc Donnell) ; Battle Glider (AGA) ; Bayerische Flugzeugwerke (Messerschmitt) ; Bayerische MotorenWerke (BMW) ; Bedunkovich (NIAI) ; Beeman (Schmued-Beeman) ; Belaev/Belyayev (Byelyayev) ; Beriev (Byeryev) ; Bf 109Z (Messerschmitt) ; BFW (Messerschmitt) ; Bi-empennage (Albert) ; Bifusoliera (Reggiane, Macchi) ; Biplane Fighter (DTD) ; Black Widow (Northrop, Slingsby) ; BN (Bestetti-Nardi) ; Br (Bréguet)) ; British-Burnelli (Cunliffe-Owen) ; BSh-MV (Mozharovskiy) ; Burnelli-Bowlus (Bowlus) ; Bv (Blohm und Voss) ; Byedunkovich (NIAI) ; **C**.205 Bifusoliera (Macchi) ; C-65/107 (Stout) ; C-82 (Fairchild) ; Ca (Caproni) ; Caccia-Combattimento (Santangelo, SIAI trimotore) ; Caccia Santangelo (Santangelo) ; Cagnet (General Aircraft) ; CAM (Moskalyev) ; Canadian Car & Foundry (CCF) ; Canard P-38 (Lockheed) ; Cancargo (CCF) ; CB-34 (CCF) ; CBY-3 (CCF) ; CCCP-123 (Gribovskiy) ; Centre (SNCAC) ; CG-16 (Bowlus) ; CG-9 (AGA) ; Chausson (SECAN) ; Compagnie Anonyme de Productions et de Réalisations Aéronautiques (CAPRA) ; Combattimento (Santangelo, SIAI trimotore) ; Corsaro/Corsario (Caproni) ; Courlis (SECAN) ; C.S. (Santangelo) ; **D** (Borovkov-Florov) ; D-2/5 (Hughes) ; D-23 DB (Fokker) ; Daini/Daisan (Tachikawa) ; Davis Manta (Mc Donnell) ; DB-LK (Byelyayev) ; Delta F (Willoughby) ; Design Development Material Division (DDMDAL) ; Deutsches Forschunginstitut für Segelflug (DFS) ; DFS-Klemm 25 (DFS 25) ; DH (De Havilland) ; Difoga (Diepen) ; Directorate of Technical Development (DTD) ; DJ (Demaizière-Joffrin) ; Do (Dornier) ; Doblhoff (WNF) ; Dupuy (SNCASO) ; Dvukhvostka (Byelyayev) ; DX-2 (Hughes) ; D-XXIII (Fokker) ; **E**-1910 (SNCASO) ; E2-26 to 2-32 (Messerschmitt) ; E340/530/555-9 (Arado) ; E-48/51/52(Praga) ; E500 (Gotha) ; E5/42 (Westland) ; E6/41 (De Havilland) ; EF-135 (Junkers) ; Entwurf (E) ; EOI (Byelyayev) ; Explorer (Abrams) ; **F**-11 (Hughes D-5) ; F-15 (Northrop) ; F.147/160/180 (Fokker) ; F.18/37 (Gloster) ; F.18/40 (Boulton-Paul P.99) ; F-78 (Fairchild) ; F-82 (North American XP-82) ; FCS (Kaiser) ; Fi (Fieseler) ; Firestone (AGA, Pittcairn) ; Flitzer (Focke-Wulf) ; Float P-38 (Lockheed) ; Florov (Borovkov-Florov) ; Flying Airsedan (Kotuba) ; Flying Car (Hall) ; Flying Cargo Ship (Kaiser) ; Flying Observation Post (General Aircraft) ; Flying Whale (Martin) ; Flying Wing (Bowlus) ; FOP (General Aircraft) ; Frégate (Alliet-et-Larivière) ; Fw (Focke-Wulf) ; Fw 281 (Focke-Wulf PTL-7) ; **G**&A (AGA, Pittcairn) ; G-17 (Gribovskiy) ; G-3 (Gribovskiy SSSR-123) ; G-58 (Fiat) ; GAL (General Aircraft) ; GB-1/8 (Aeronca) ; General Airborne (Airborne Transport) ; G-I (Fokker) ; G.L.3 (Lasserre) ; Glenn Martin (Martin) ; Go (Gotha) ; Goose (Vul-

tee) ; Greenwood (Anderson-Greenwood) ; GT (Aeronca) ; **H**a (Hamburger) ; Hammond (Stearman-Hammond, Kaiser-Hammond) ; Harceske Warsztaty Lotnicze (HWL) ; He 111Z (Heinkel) ; Heinkel P.1075 (Dornier 335Z) ; Hi (Hirth) ; HK-1 (Kaiser-Hughes) ; Hokusai (Nihon Kokusai) ; Hs (Henschel) ; Hughes-Kaiser (Kaiser-Hughes) ; **I** (Bolkhovitinov) ; I-218 (Aliexieyev) ; Instytut Techniki Szybownictwa (ITS) ; IS-207 (Borovkov-Florov) ; Istribityel (Bolkhovitinov) ; **J** 21 (SAAB) ; J4M1/J4M2 (Mitsubishi) ; Jäger (Focke-Wulf, BMW) ; James Martin (Martin Twin Hull Ocean Plane) ; Joffrin (Demaizière-Joffrin) ; JP.011 (Focke-Wulf Flitzer) ; Ju 635/835 (Junkers) ; **K**57 (Payen Pa.42/5) ; K60 (Payen Pa.140) ; K61 (Payen Pa.150/190) ; K63 (Payen Pa.240H) ; Katy (Payen) ; Ki 1-I (Maeda) ; **K**i 105 (Nihon Kokusai) ; Ki 94-1 (Tachikawa) ; Ki 98 (Mansyu) ; Kl (Klemm) ; Klemm E-51 (Praga) ; Kokusai (Nihon Kokusai) ; Kombain/Kombayn (Mozharovskiy) ; KT (Antonov) ; Ku 1-I (Maeda) ; Ku 7 (Nihon Kokousai) ; Kutei-Butai (Sato) ; **L**.13/21 (SAAB) ; L.22/24/106/121/134 (Lockheed) ; Larivière/Larivierre (Alliet et Larivière) ; Laté (Latécoère) ; Laister-Kauffman XCG-9 (AGA) ; Lawrence Institute of Technology (LIT) ; LB.2 (SAIMAN) ; LEM-2 (Antonov) ; Libellule (Lasserre) ; Liberty (Kaiser-Hughes) ; Loadmaster (CCF) ; LRG-1 (AGA) ; LRH-1 (Snead) ; LS (TsAGI) ; LSB (KB-2) ; **M**-70 (Mitsubishi) ; Magister Auxiliary Wing (Miles) ; Manazuru (Nihon Kokousaï) ; Manpi (Mansyu) ; Manta (Mc Donnell) ; MC-1 (Bowlus) ; M.C. 205 Bifusoliera (Macchi) ; Me (Messerschmitt) ; Mécanique Aviation Traction (MATra, CAPRA) ; MMS3 (Mitrovitch) ; Moskalev (Moskalyev) ; Mozarovsky/Mozharovskii/MV (Mojarovskiy) ; **N**.1480 (SNCAN) ; NA-116/120 (North American) ; Nautcho Isledovatielskiy Aero Institut (NIAI) ; Nardi (Bestetti-Nardi) ; NC-1070/1075 (SNCAC) ; Nippon Kokusai (Nihon Kokusai) ; Nord (SNCAN) ; Northrop Shrike (DDMDAL) ; NS-8 (Northrop) ; **O**-61 (Pittcairn) ; OA-1 (Cunliffe-Owen) ; Odnomotornii Shturmovik (NIAI) ; Ohtori (Nihon Kokusai) ; OKA-33 (Antonov LEM-2) ; OSh (NIAI) ; Otarie (Payen) ; **P**.011/0310 (Focke-Wulf) ; P.1075 (Dornier 335Z) ; P.1078B (Heinkel) ; P.28/42/110/111/122-125/167/192/196 (Blohm und Voss) ; P.2 (Abrams) ; P.200Z (Blohm und Voss Bv 426) ; P.208-215 (Blohm und Voss) ; P.2137 (Weserflug) ; P.28 (Blohm und Voss) ; P.3001/3002 (Gotha) ; P-322 (Lockheed) ; P.33 (Brewster) ; P.35 (Gotha, Percival) ; P.36 (Percival) ; P.360TP (Payen) ; P.37 (Percival) ; P-38 (Lockheed) ; P.39/46 (Gotha) ; P-49/58 (Lockheed) ; P-52/59 (Bell) ; P-54 (Vultee) ; P.61/P-61 (Blohm und Voss, Northrop) ; P-68 (Vultee) ; P-73 (Hughes) ; P-82 (North American) ; P.97/99 (Boulton-Paul) ; P.III (BMW) ; P.IV to VIII (Focke-Wulf) ; Pa (Payen) ; PA/PA-7 (Piper) ; PA-44 (Pittcairn) ; PA-60 (Aubert) ; Packet (Fairchild) ; PB (Pemberton-Billing, Piper) ; PBI (Byelyayev) ; PC.4/7 (Abrams) ; Pegaz (HWL) ; Pellarini AER.1 (Aernova) ; Peterle (Focke-Wulf) ; PI (KB-2) ; PK (Sukhoi RK) ; Podlaska Wytwornia Samolotov (PWS) ; Postwar Aircraft Nr 1 (Piper) ; Project/Projekt (P.) ; Projekt B/C (Daimler-Benz) ; PSN-2 (Nikitin) ; PTL (Focke-Wulf) ; PWA-1 (Piper) ; **R**-11 (Hughes D-5) ; R.21 (Rubik) ; R-100 (Matra) ; R-42/45 (Renard) ; R.90 (CAPRA) ; RD-1120 (North American) ; Re (Reggiane) ; Recon P-38 (Lockheed) ; Reporter (Northrop) ; RK (Sukhoi) ; RP-38 (Lockheed) ; Rubis (Michelet) ; RX-1/2 (SAAB) ; **S**.20/21/22 (De Schelde) ; S56 (Letov) ; Saetta/Saettante (Bestetti-Nardi) ; SAM (Moskalyev) ; Savoia-Marchetti (SIAI) ; Sea P-38 (Lockheed) ; Senden (Mitsubishi) ; Seversky Super-Clipper (Republic) ; Shrike (DDMDAL, Vultee XP-54) ; Six-passenger (Luscombe) ; Skycar (Stout) ; Skycoupe (Piper) ; SL-6 (Skoda-Kauba) ; SM (SIAI) ; SNCAC Frégate (Alliet et Larivière) ; SNCA Centre (SNCAC) ; SNCA Nord (SNCAN) ; SNCA Sud Ouest (SNCASO, Lasserre) ; Snipe (?) ; SO (SNCASO) ; Societa Italiana Aeroplani Idrovolanti (SIAI) ; Société d'Etudes et de Constructions Aéro-Navales (SECAN) ; Société Nationale de Construction Aéronautique (SNCA) ; Société Usines Chaussons (SECAN) ; Spidercrab (De Havilland) ; SSSR-123 (Gribovskiy) ; Strahljäger (Focke-Wulf, BMW) ; Stratoplane (Abrams) ; SUC.10 (SECAN) ; Sud-Ouest (SNCASO, Lasserre) ; Sukhoy (Sukhoi) ; Super-Clipper (Republic) ; Survey Ship 14 (Abrams) ; Svenska Aeroplan (SAAB) ; Swoose Goose (Vultee XP-54) ; Swordfish (Lockheed) ; **T**-27 (Slingsby) ; Ta (Focke-Wulf) ; Ta 281 (Focke-Wulf PTL-7) ; Tank (Focke-Wulf) ; THOP (Martin Twin Hull Ocean Plane) ; TL-Jäger (Focke-Wulf, BMW) ; Tornado (Vultee) ; Tow-Fighter (Pemberton-Billing) ; Transportflugzeug (Henschel) ; Transport 500t/1000t (Bréguet) ; Trimotore (Santangelo, SIAI) ; Tsentralnii Aéro-Guidro-dinamitcheskii Institout (TsAGI) ; T-VI (Fokker) ; Twin Hull Ocean Plane (Martin) ; Twin-51G (North American) ; Twin-Cadet (Slingsby) ; Twin-Fortress (Boeing) ; Twin-Hotspur (General Aircraft) ; Twin-Mustang (North American) ; **U**C-107 (Stout) ; Uhu (Focke-Wulf 189) ; **V**.78/84 (Vultee) ; V6 (Skoda-Kauba) ; Valhalla (Blohm und Voss Bv 426) ; Vampire (De Havilland) ; Venevidov/Venyevidov (Mojarovskiy) ; Venturi (Pemberton-Billing) ; Vyenyevidov (Mojarovskiy) ; **W**-1 (Weick) ; Whale (Martin) ; Whitworth (Armstrong-Whitworth) ; Widow (Northrop, Slingsby) ; Wright Field Aircraft Laboratory (DDMDAL) ; Wiener-Neustadt (WNF) ; Wn 16 (WNF) ; **X**-608 (Hughes, Lockheed) ; XA-37 (Hughes) ; XC-65 (Stout) ; XC-82 (Fairchild) ; XCG-16 (Bowlus) ; XCG-9 (AGA) ; XF-11 (Hughes) ; XF-15 (Northrop) ; XF-82 (North American XP-82) ; XLRG-1 (AGA) ; XLRH-1 (Snead) ; XO-61 (Pittcairn) ; XP-38/49/58 (Lockheed) ; XP-52/59 (Bell) ; XP-54/68 (Vul-

tee) ; XP-61 (Northrop) ; XP-73 (Hughes) ; XP-82 (North American) ; XR-11 (Hughes D-5) ; **Y** (Stearman-Hammond) ; YP-61 (Northrop).

Special thanks, for their free documentation, to Justo Miranda, Herbert Léonard, Nigel Eastaway and the Russian Aviation Research Trust, Andrew Stokell, Alexandra & Martin Spencer, Michel Labidoire, Ferdinando d'Amico, Didier Campion, Jack Van der Vier and Rick Allen (via J. Miranda), Paul Malmassari (via H. Léonard), Mr Shibuya (via A. Spencer).

Thanks also to Frank Smith Aviation Books, Pickering & Co., Midland Counties Publications/2nd hand dpt, Aux Caravelles, La Maison du Livre Aviation, J.C. Le Carrères, F. Bazelot, Corel Photo Library (via Micro-plume), and P. Gaillard.